Non-contacting speed sensor FA5, with signal amplifier

Scan type	Non-contacting
Measuring principle	Difference-hall-effect principle
Frequency range	0.2 ... 20,000 Hz
Supply voltage	9 ... 32 VDC or 2 x 9 ... 32 VDC
Scan object	Ferromagnetic materials Tooth wheel: Module m1 to m3; tooth face width > 7 mm (spur gear DIN867) Hole: Ø ≥ 5 mm, web ≥ 2 mm, depth ≥ 4 mm Groove: Ø ≥ 4 mm, web ≥ 2 mm, depth ≥ 4 mm
Protection class	Housing: IP66/IP68/IP69 Connection: IP66/IP68
Material	Sensor tube: Stainless steel Adapter: Chromatised aluminium
Length	See drawing
Mounting	Flange mounting
Measuring channels	2 measuring channels or 2 galvanically isolated measuring channels or 2 measuring channels and 1 additional channel for rotation direction detection
Output signals and signal form	2 x square wave signals or 2 x square wave signals, 1 x status signal
Output stage	Push-pull amplifier
Options	Inverted output signals; galvanically isolated output signals; status signal for direction of rotation detection

CE

Drehzahlsensor FA5

Application range

Speed sensors of the FA[..]5 series are especially designed for use in: Transport technology .They measure the speed of ferromagnetic toothed wheels. Furthermore they can be used to measure any movement of ferromagnetic parts, e. g.:

- Toothed wheels with different tooth forms
- Bolt heads
- Lands detects holes, openings or grooves
- Impulse bands for plain shafts (accessories)

Specific features

- Excellent vibration and shock resistance
- Robust and high quality housing: IP68 pressure-tight and individually tested at 5 bar (for details see technical data)
- Connection outlet straight or lateral; with protective tubing on request
- High degree of EMC immunity for difficult electrical environment
- Detection of very low speed (near zero speed)
- Due to its design and type approval according to DIN EN 50155 especially suitable for transport technology

Measuring principle

Speed sensors of the FA[..]5 series operate according to the difference-hall-effect principle.

Two closely spaced Hall elements are located on the sensor chip. The field of the magnet generates a constant voltage in the Hall elements. Ferromagnetic objects with an interrupted surface moving past the Hall elements cause the Hall voltage to change. When the moving part covers a Hall element and the other does not, a differential voltage is generated to provide a measuring signal. The frequency of this signal is proportional to the speed of movement (rotational speed). The difference-hall-effect principle is direction sensitive.

Overview speed sensors FA[..]5

Except otherwise specified, the sensors in the next table have voltage signal outputs.

Type	Measuring principle	Signal outputs	Signal form
FAHZ2	Difference-hall effect	Two square wave signals, Q2 to Q1 is 90° phase shift	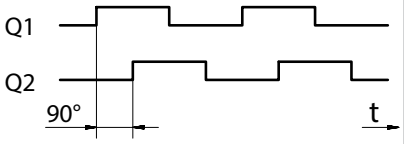
FAHS5	Difference-hall effect	Two square wave signals + one status signal Q2 to Q1 is 90° phase shift	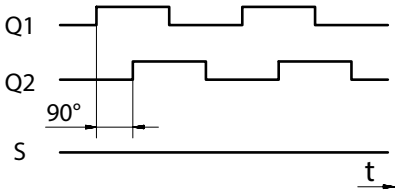
FAHD5	Difference-hall effect	Two square wave signals, galvanically isolated, Q2 to Q1 is 90° phase shift, type FAHD5, with voltage signal output,	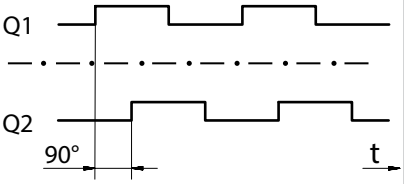
FAHQ5	Difference-hall effect	Two + Two inverted square wave signals, Q1 to Q2 and Q1_N to Q2_N are 90° phase shift	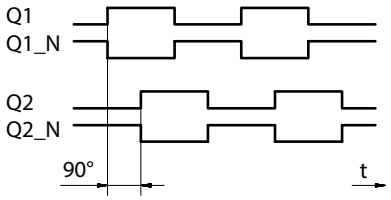

NORIS Automation GmbH | Muggenhofer Str. 95 | 90429 Nuremberg | Germany | Tel: +49 911 3201-220 | Fax: +49 911 3201-150 | sales@noris-group.com | www.noris-group.com
Errors and omissions excepted

Dimensions, connections and drawings

Dimensions and mounting drawing

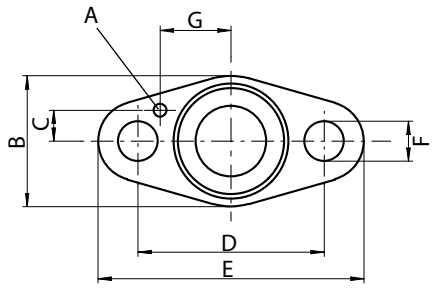

Fig.: FAH[..]5_Front View_Dimensions

Explanation to the left illustration

A) Position pin 3 mm (installing position) acc. DIN1481-3
B) Length 29.5 mm
C) Length 7 mm
D) Length 42 mm
E) Length 60 mm
F) Diameter Ø $9^{-0.5}$ mm
G) Length 16 mm

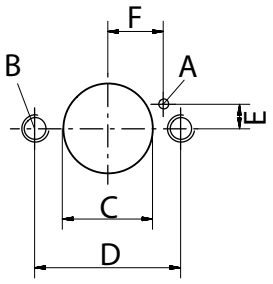

Fig.: Borehole for FAH[..]5_Top view

Explanation to the left illustration

A) Borehole depth for position pin 3 mm (installing position) acc. DIN1481-3, borehole diameter Ø 4 to 5 mm
B) Borehole size M8-15
C) Diameter Ø 26^{H10} mm
D) Length $42^{\pm 0.2}$ mm
E) Length 7 mm
F) Length 16 mm

Recommended fixing: Hexagon socket screw DIN912 M8x20 with spring ring.

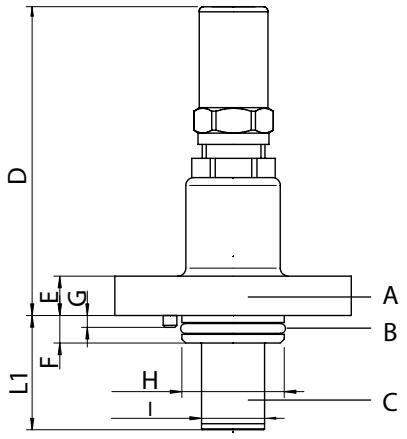

Abb.: FAH[..]5_Straight connection outlet

Explanation to the left illustration

A: Flange: Chromatised aluminium (conductive)
B: O-Ring seal 21 x 2.5 mm
C: Sensor tube: Stainless steel
D) Length 53…78 mm (depending from connection)
L1) Nominal Length L1 see type code
E) Length 10 mm
F) Length 7 mm
G) Length 3 mm
H) Diameter 26^{d10} mm
I) Diameter 16 mm

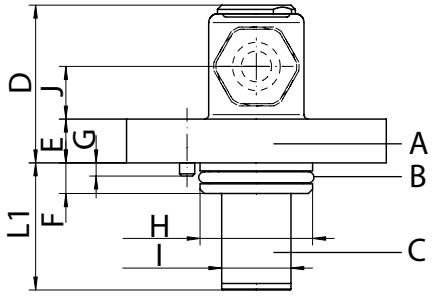

Fig.: FAH[..]5_90° connection outlet

Explanation to the left illustration

A) Flange: Chromatised aluminium (conductive)
B) O-Ring seal 21 x 2.5 mm
C) Sensor tube: Stainless steel
D) Length $37^{\pm 1}$ mm
L1) Nominal Length L1 (see type code)
E) Length 10 mm
F) Length 7 mm
G) Length 3 mm
H) Diameter 26^{d10} mm
I) Diameter 16 mm
J) Length 12 mm

NORIS Automation GmbH | Muggenhofer Str. 95 | 90429 Nuremberg | Germany | Tel: +49 911 3201-220 | Fax: +49 911 3201-150 | sales@noris-group.com | www.noris-group.com
Errors and omissions excepted

Mounting position and scan object distance

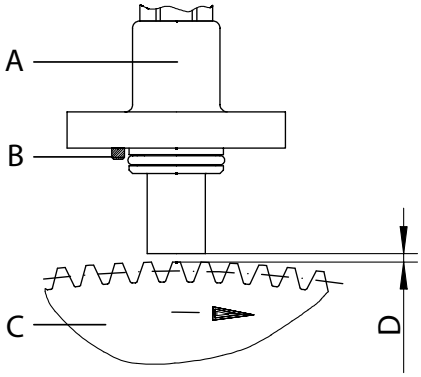

Explanations to the left illustration

A) Sensor housing
B) Position pin for correct mounting position
C) Tooth Wheel
D) Recommended distance from scanning see technical data

Connection cables and pin assignment

The following table shows an overview about the speed sensors and the related connection cables. All cables are available without protective tubing (-X type), with textile reinforced protective tubing (-XGT type), with steel reinforced protective tubing (-XGS type) or with polyamide protective tubing (-XP).

Connection type -X, -XGS, -XP	FAHZ5	FAHS5	FAHD5	FAHQ5
Cable with 4 wires	X	-	-	-
Cable with 6 wires	-	X	X	X

Connection cable type -X for sensors with 4 connecting wires

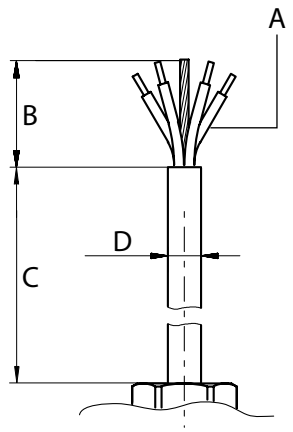

Explanation to the left illustration

A) Wires 4 x 0.33 mm^2 halogen-free
B) Length 80 $^{\pm 10}$ mm
C) Length K1 ± 5% (K1 see customer drawing)
D) Diameter 7 $^{\pm 0.5}$ mm
Protection class: IP66/IP68

NORIS Automation GmbH | Muggenhofer Str. 95 | 90429 Nuremberg | Germany | Tel: +49 911 3201-220 | Fax: +49 911 3201-150 | sales@noris-group.com | www.noris-group.com
Errors and omissions excepted

Connection cable type -X for sensors with 6 connecting wires

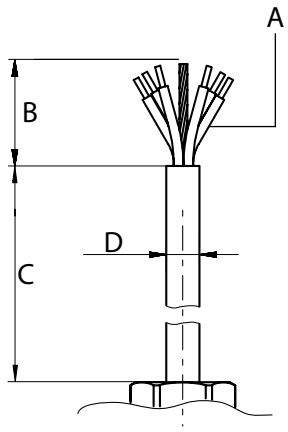

Explanation to the left illustration

A) Wires 6 x 0.33 mm² halogen-free
B) Length 80 ±10 mm
C) Length K1 ± 5% (K1 see customer drawing)
D) Diameter 7 ±0.5 mm
Protection class: IP66/IP68

Connection cable type -XGS[..], -XGT[..] (protective tubing steel or textile reinforced) for sensors with 4 connecting wires

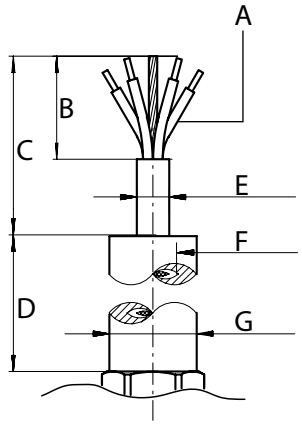

Explanation to the left illustration

A) Wires 4 x 0.33 mm² halogen-free
B) Length 80 ±10 mm
C) Length 200 ±20 mm
D) Length K1 ± 5% (K1 see customer drawing)
E) Diameter 4.6 ±0.5 mm
F) Inner diameter 6.4 ±0.5 mm
G) Outer diameter 13.5 ±0.7 mm
Protection class: IP66/IP68/IP69

Connection cable type -XGS[..], -XGT[..] (protective tubing steel or textile reinforced) for sensors with 6 connecting wires

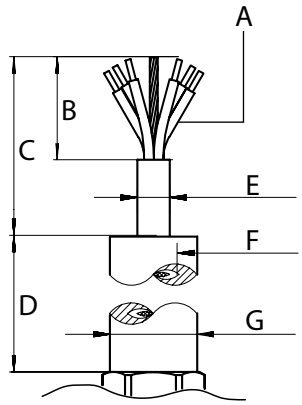

Explanation to the left illustration

A) Wires 6 x 0.33 mm² halogen-free
B) Length 80 ±10 mm
C) Length 200 ±20 mm
D) Length K1 ± 5% (K1 see customer drawing)
E) Diameter 7 ±0.5 mm
F) Inner diameter 9.5 ±0.5 mm
G) Outer diameter 16.5 ±0.5 mm
Protection class: IP66/IP68/IP69

NORIS Automation GmbH | Muggenhofer Str. 95 | 90429 Nuremberg | Germany | Tel: +49 911 3201-220 | Fax: +49 911 3201-150 | sales@noris-group.com | www.noris-group.com
Errors and omissions excepted

Connection cable type -XP[..] (polyamide protective tubing) for sensors with 4 connecting wires

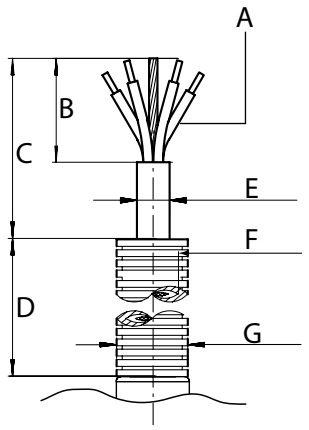

Explanation to the left illustration

A) Wires 4 x 0.33 mm² halogen-free
B) Length 80 ±10 mm
C) Length 200 ±20 mm
D) Length K1 ± 5% (K1 see customer drawing)
E) Diameter 7 ±0.5 mm
F) Inner diameter 9.6 ±0.5 mm
G) Outer diameter 13 ±0.5 mm
Protection class: IP66/IP68

Connection cable type -XP[..] (polyamide protective tubing) for sensors with 6 connecting wires

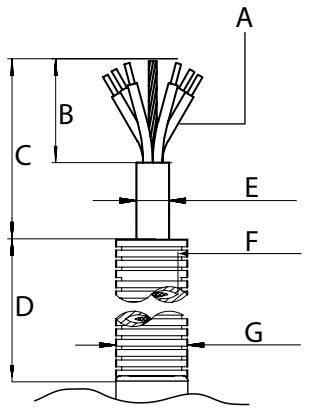

Explanation to the left illustration

A) Wires 6 x 0.33 mm² halogen-free
B) Length 80 ±10 mm
C) Length 200 ±20 mm
D) Length K1 ± 5% (K1 see customer drawing)
E) Diameter 7 ±0.5 mm
F) Inner diameter 9.6 ±0.5 mm
G) Outer diameter 13 ±0.5 mm
Protection class: IP66/IP68

Connection assignment for type FA[..]Z

Colour	Explanation
Brown	U_S +
Green	U_S - (0V)
White	Signal Q1
Yellow	Signal Q2
Shielding	Ground

Connection assignment for type FA[..]S

Colour	Explanation
Brown	U_S +
Green	U_S - (0V)
White	Signal Q1
Yellow	Signal Q2
Grey	Status output for direction of rotation detection
Pink	NC
Shielding	Ground

NORIS Automation GmbH | Muggenhofer Str. 95 | 90429 Nuremberg | Germany | Tel: +49 911 3201-220 | Fax: +49 911 3201-150 | sales@noris-group.com | www.noris-group.com
Errors and omissions excepted

Connection assignment for type FA[..]D

Colour	Explanation
Brown	Sensor 1: U_{S1} +
Green	Sensor 1: U_{S1} - (0V)
White	Sensor 1: Signal Q1
Pink	Sensor 2: U_{S2} +
Grey	Sensor 2: U_{S2} - (0V)
Yellow	Sensor 2: Signal Q2, 90° phase shift to Q1
Shielding	Ground

Connection assignment for type FA[..]Q

Colour	Explanation
Brown	U_S +
White	Q1
Grey	Q1_N, inverted to Q1
Yellow	Q2, 90° phase shift to Q1
Pink	Q2_N inverted to Q2, 90° phase shift to Q1_N
Green	U_S - (0V)
Shielding	Ground

NORIS Automation GmbH | Muggenhofer Str. 95 | 90429 Nuremberg | Germany | Tel: +49 911 3201-220 | Fax: +49 911 3201-150 | sales@noris-group.com | www.noris-group.com
Errors and omissions excepted

Elementary circuit diagram

Elementary circuit diagram FA[..]Z

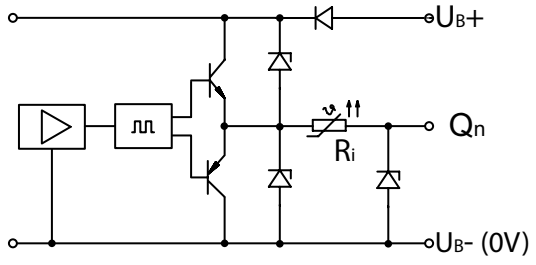

Elementary circuit diagram FA[..]S

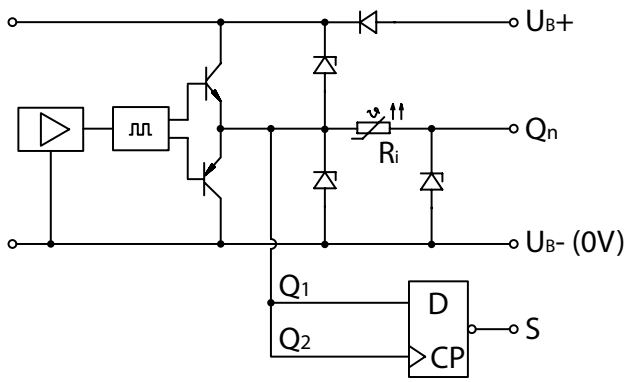

Elementary circuit diagram FA[..]D

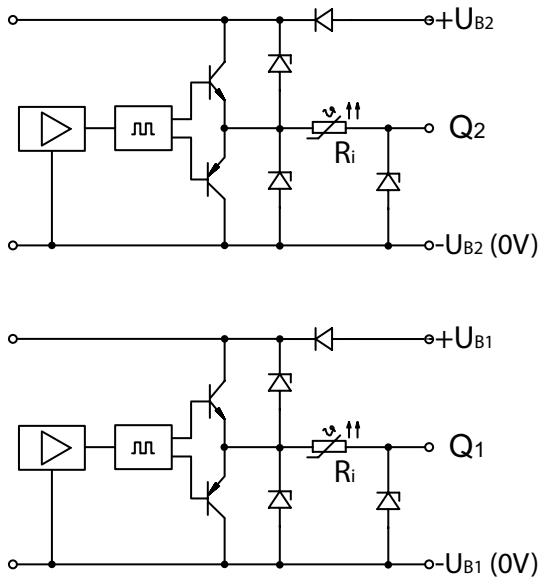

Elementary circuit diagram FA[..]Q

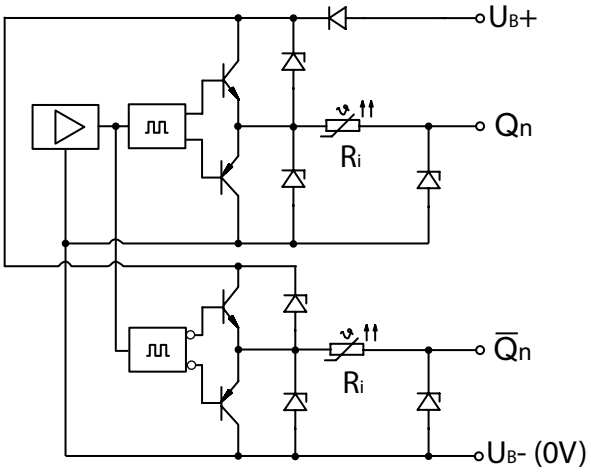

NORIS Automation GmbH | Muggenhofer Str. 95 | 90429 Nuremberg | Germany | Tel: +49 911 3201-220 | Fax: +49 911 3201-150 | sales@noris-group.com | www.noris-group.com
Errors and omissions excepted

General technical data

Electrical connection	
Supply voltage	*See specific technical data*
Nominal voltage	*See specific technical data*
Current consumption	*See specific technical data*
Reverse voltage protection	Yes
Over voltage protection	Yes
Connection	Cable end, customized connections acc. customer drawing
Recommended cable length	< 100 m
Used cable cross section	0,33 mm^2, shielded

Electrical output	
Measuring channels	*See specific technical data*
Output signals and signal form	*See specific technical data*
Output stage	Push-pull amplifier
Continuous short circuit prot.	Yes
Galvanic separation	*See specific technical data*
Output level Low	Per channel: ≤ 0.8 V @ 24 VDC, 10 mA, 24 °C
Output level High	Per channel: ≥ UB-1.6 V @ 24 VDC, 10 mA, 24 °C
Output current (Sink)	Per channel: max. -50 mA
Output PNP (Load)	Per channel: max. 50 mA
Internal resistance	50 Ω
Rise time	≥ 10 V/µs

Signal acquisition	
Measuring principle	Difference-hall-effect principle
Frequency range	0.2 ... 20,000 Hz
Scan object - distance	0.2 ... 3 mm; recommended: 1.0 ± 0.5 mm
Scan object	Ferromagnetic materials Tooth wheel: Module m1 to m3; tooth face width > 7 mm (spur gear DIN867) Hole: Ø ≥ 5 mm, web ≥ 2 mm, depth ≥ 4 mm Groove: Ø ≥ 4 mm, web ≥ 2 mm, depth ≥ 4 mm
Phase-shift	90° ± 10% @ m1.5...m3 | 90° ± 15% @ m1...m1.25
Duty cycle	50% ± 10%

NORIS Automation GmbH | Muggenhofer Str. 95 | 90429 Nuremberg | Germany | Tel: +49 911 3201-220 | Fax: +49 911 3201-150 | sales@noris-group.com | www.noris-group.com
Errors and omissions excepted

Environmental influences	
Operating temperature	-40 ... +120 °C
Storage temperature	Recommended: -25 ... +70 °C; max.: -40 ... +105 °C (max. limit values within 30 days per year @ relative humidity 5...95%)
Protection class	Housing: IP66/IP68/IP69 Connection: IP66/IP68
Vibration resistance	DIN IEC 60068-T2-6, 10 g @ 5…2000 Hz (Sinus) DIN EN 61373, 30 g @ 20…500 Hz (Random)
Shock resistance	DIN IEC 60068-T2-27, 1000 m/s^2 @ 6 ms
Climatic test	DIN IEC 60068-T2-1/-2/-30
EMI - ESD	IEC 61000-4-2, Lev. 3
EMI - Burst	IEC 61000-4-4, Lev. 3
EMI - Surge	IEC 61000-4-5, Lev. 2
EMI - HF immunity	IEC 61000-4-3, 10 V/m IEC 61000-4-6 (RF - conducted), 10 Veff IEC 60553 (AF - conducted), 10 Veff
Emitted interference	CISPR 16-1, CISPR 16-2 EMC2
Insulation voltage	500 VAC, 50 Hz @ 1 min (channel 1 and channel 2 against housing; channel 1 against channel 2)
Further standards	DIN EN 50155, DIN EN 45545

Mech. Quantities	
Material	Sensor tube: Stainless steel Adapter: Chromatised aluminium
Mounting	Flange mounting
Length	See drawing
Installation position	Preset with direction of rotation definition, with position pin defined
Weight	100 ... 300 g (depending on connection and length)
Pressure resistance	5 bar (measuring tip)

NORIS Automation GmbH | Muggenhofer Str. 95 | 90429 Nuremberg | Germany | Tel: +49 911 3201-220 | Fax: +49 911 3201-150 | sales@noris-group.com | www.noris-group.com
Errors and omissions excepted

Specific technical data

Technical data for electrical connection and output

Sensors with two output signals (galvanically connected)

FAHZ[..]	
Supply voltage	9 ... 32 VDC
Nominal voltage	15 VDC
Current consumption	< 20 mA (without output current PNP)
Measuring channels	2 measuring channels
Output signals and signal form	2 x square wave signals
Galvanic separation	No

Sensors with two galvanically isolated output signals

FAHD[..]	
Supply voltage	2 x 9 ... 32 VDC
Nominal voltage	2 x 15 VDC
Current consumption	2 x <10 mA (without output current PNP)
Measuring channels	2 galvanically isolated measuring channels
Output signals and signal form	2 x square wave signals
Galvanic separation	Yes

Sensors with two output signals and status output

FAHS[..]	
Supply voltage	9 ... 32 VDC
Nominal voltage	15 VDC
Current consumption	< 20 mA (without output current PNP)
Measuring channels	2 measuring channels and 1 additional channel for rotation direction detection
Output signals and signal form	2 x square wave signals, 1 x status signal
Galvanic separation	No

Sensors with two output signals und two inverted output signals

FAHQ[..]	
Supply voltage	9 ... 32 VDC
Nominal voltage	15 VDC
Current consumption	< 20 mA (without output current PNP)
Measuring channels	2 measuring channels
Output signals and signal form	2 x square wave signals not inverted, 2 x square wave signals inverted
Galvanic separation	No

NORIS Automation GmbH | Muggenhofer Str. 95 | 90429 Nuremberg | Germany | Tel: +49 911 3201-220 | Fax: +49 911 3201-150 | sales@noris-group.com | www.noris-group.com
Errors and omissions excepted

Type code

Type code structure										
FA	**H**	**Z**	**5-**	**11**	**S**	**X**	**07**	**-M30**	**S0**	**Example: FAHZ5-11-SX07-M30S0**
	Measuring principle									
		Measuring principle supplement								
			Construction type and material							
				Nominal length L1 of the sensor tube						
					Connection outlet					
						Electrical connection				
							Cable length			
								Module		
									Shielding	

Type code FA[..]5										
Measuring principle	**H**	Difference-hall effect principle								✹
Measuring principle supplement		**Z**	2 output signals (voltage)							✹
		D	2 output signals (voltage), galvanically isolated							
		S	2 output signals (voltage) + Status output channel for direction of rotation detection							
		Q	4 output signals (voltage, 2 + 2 inverted)							✹
Construction type and material			**5**	Flange, chromatised aluminium, stainless steel sensor tube						✹
Nominal length				**-11**	L1 = 29 mm					✹
Connection outlet						Without code: straight cable outlet				✹
					-S	Lateral cable outlet				
Electrical connection						**-X**	Cable end standard (without protective tubing)			✹
						-XGS	Cable end, protective tubing, steel reinforced			
						-XGT	Cable end, protective tubing, textile reinforced			
						-XP	Cable end, protective tubing, polyamide			
Cable length							**05**	Sheath length 2.0 m, halogen-free		
							07	Sheath length 5.0 m, halogen-free		✹
							08	Sheath length 7.5 m, halogen-free		
							09	Sheath length 10.0 m, halogen-free		
Module								**-M10**	Module m1	
								-M12	Module m1.25	
								-M15	Module m1.5	
									Without code: Module m2	✹
								-M25	Module m2.5	
								-M30	Module m3	
Shielding										Without code: Shielding is attached to the sensor housing ✹
									S0	Shielding is not attached to the sensor housing
FA	_ _	_ _	_ _-	_ _	-_ _	_ _	_ _	-_ _	_ _	**Example: FAHZ5-11-X07 (Preferred type)**

Special types

If our standard types do not correspond with your expectation, we are pleased to develop a special solution together with you.

Preferred types

Features marked with a ✹ symbol at the end of the line are preferred features. If you select a preferred feature for each placeholder, the device is specified as preferred type. Preferred types are available quickly from stock. Other types will be delivered according to scheduled appointments.

NORIS Automation GmbH | Muggenhofer Str. 95 | 90429 Nuremberg | Germany | Tel: +49 911 3201-220 | Fax: +49 911 3201-150 | sales@noris-group.com | www.noris-group.com
Errors and omissions excepted